TECHNICAL SPECIFICATIONS

Trois-Pistoles

Shower Name : ***Poséidon 32 [1 piece]***

Collection : Shower Collection

Dimensions : **32 X 32 X 77**

FRONT VIEW

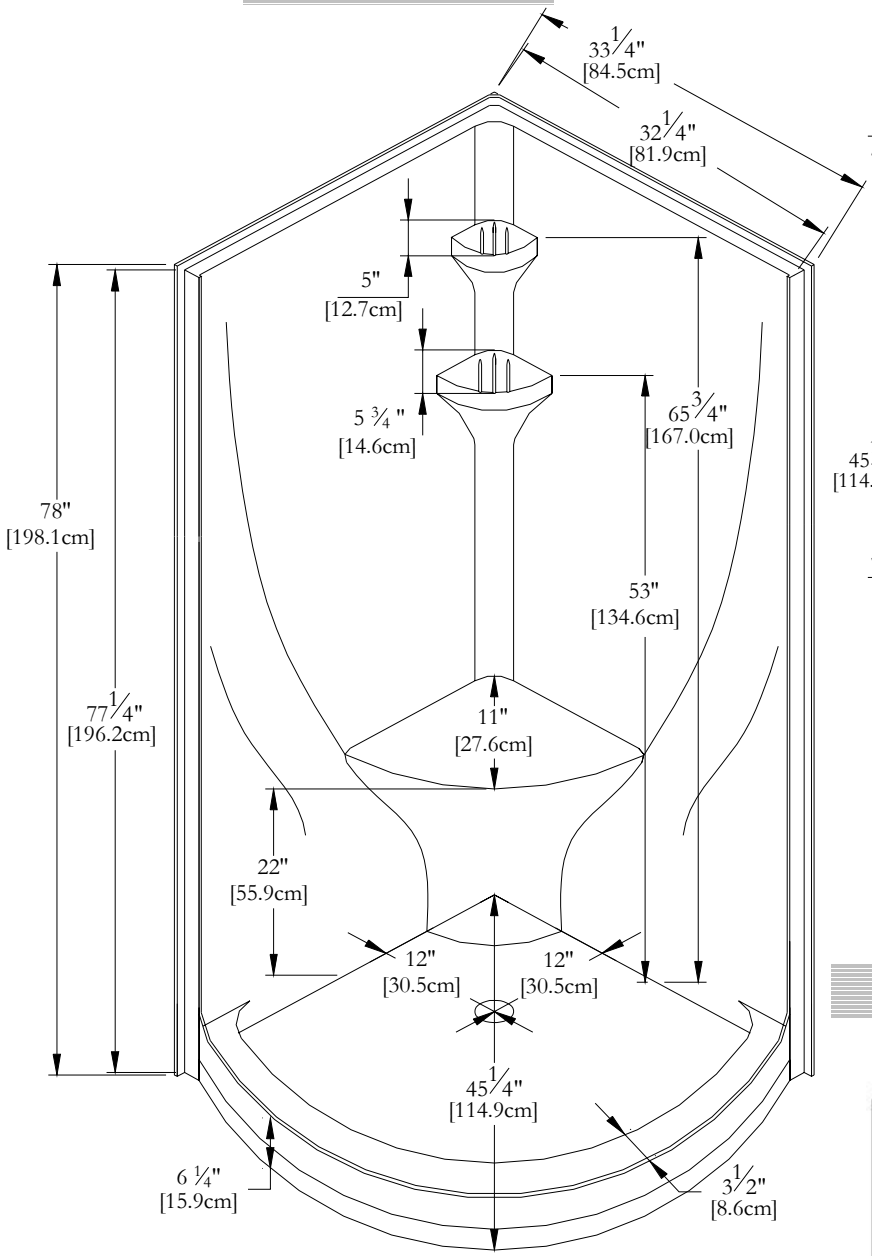

TOP VIEW

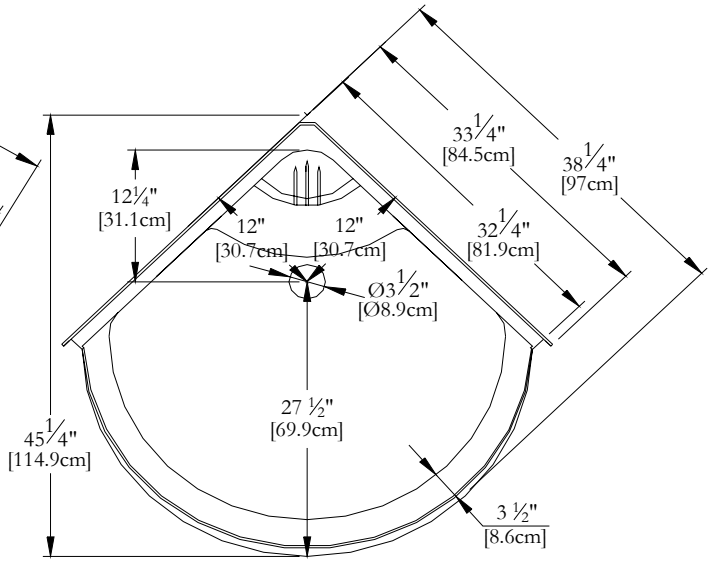

* All measurements are precise to ±1/4" [0.63 cm]. Technical specifications are subject to change without prior notice.

HYDRO SHOWER SYSTEM

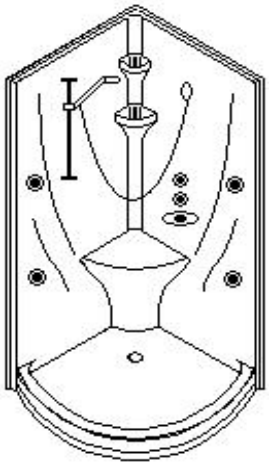

* Optional Hydro-Massage systems are factory pre-plumbed as illustrated.

* Please specify **RIGHT or LEFT** on order for valve installation. Right hand shown.

Océania Baths inc.
8, rue Patrice Côté
Trois-Pistoles (Québec)
Canada, G0L 4K0

Info-Line
1-888-851-8918
1-877-332-4224

Fax
1-877-880-8918
1-866-460-4334

Home Office :
Oceania Baths inc.
591, avenue des Entreprises
Thetford Mines (Québec)
Canada, G6H 4B2

www.oceaniabaths.com

MAR 2008 / REV 02